Quantum Transformers for Image Generation

Atishay Narayanan

Princeton University

Niraj Babar, Sunil Vittal, Glen Uehara, Gennaro De Luca, Andreas Spanias

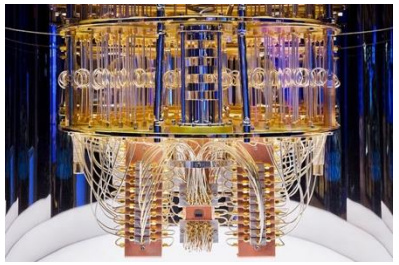

PURPOSE

- Reconstruct images with a Generative Pre-trained Transformer (GPT) model
- Utilize a Quantum Self-Attention circuit within the transformer

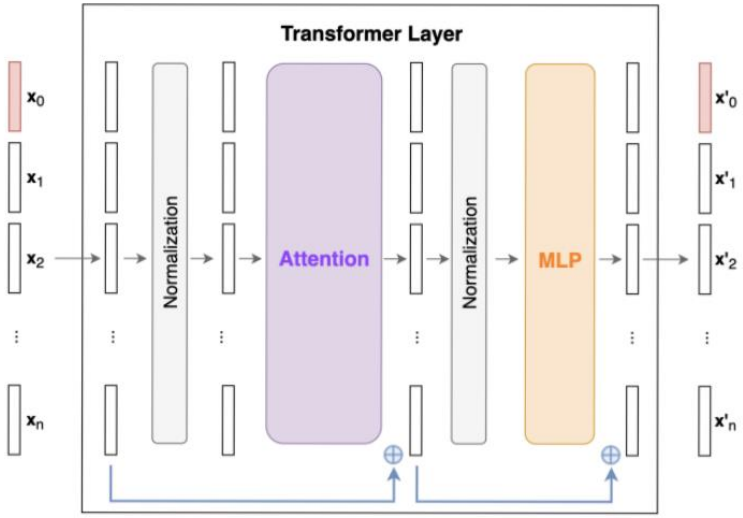

METHODOLOGY

- Compute K-means clusters of pixel intensities on the MNIST digits data set
- Train hybrid GPT with clusters as model vocabulary and predict next pixel based on previous sequence

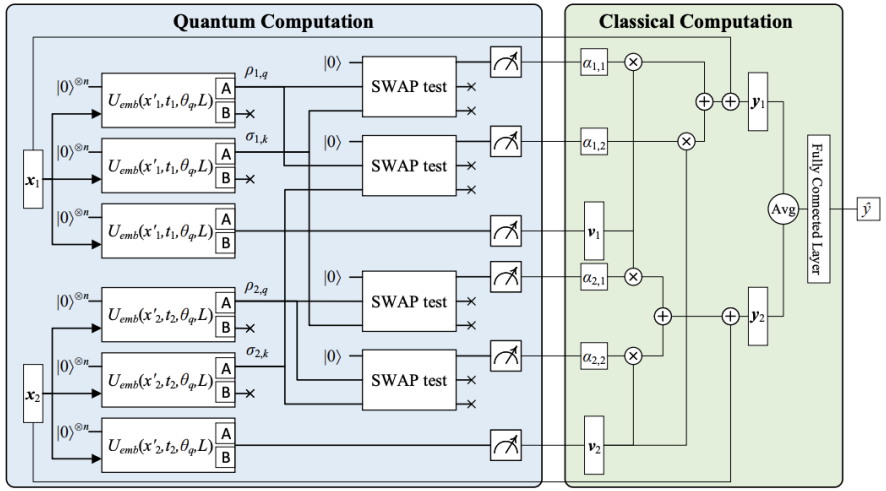

QMSAN Framework

PRELIMINARY RESULTS

Left column is input, middle columns are model completions, and right column is ground truth

FURTHER STUDY

- Create a fully quantum transformer block by utilizing mid-circuit measurement
- Run training on quantum hardware

Ira A. Fulton Schools of Engineering
ARIZONA STATE UNIVERSITY

SenSIP
Sensor, Signal and Information Processing Center

http://sensip.asu.edu

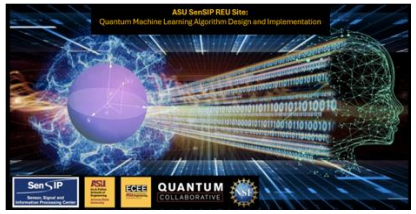

REU Site sponsored by NSF Award 2349567